Internet Protocols
Fall 2004

Lecture 5

Andreas Terzis

Outline

- Ethernet (continued)
  - Ethernet Technologies
  - Ethernet Switching
- 802.11
  - CDMA
  - MACA
- ARP

Ethernet Frame Structure

Sending adapter encapsulates IP datagram (or other network layer protocol packet) in Ethernet frame

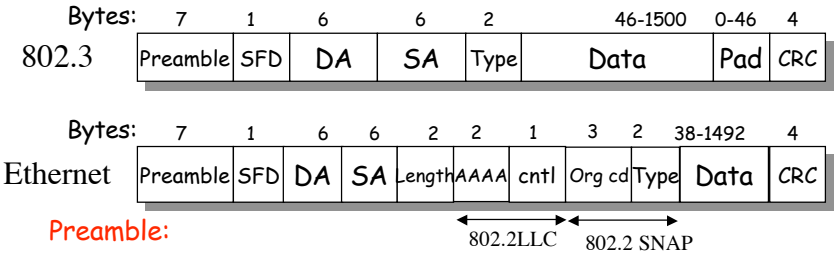

Preamble:

- 7 bytes with pattern 10101010 followed by one byte with pattern 10101011
- used to synchronize receiver, sender clock rates

Ethernet Frame Structure (more)

- Addresses: 6 bytes
  - if adapter receives frame with matching destination address, or with broadcast address (eg ARP packet), it passes data in frame to net-layer protocol
  - otherwise, adapter discards frame
- Type: indicates the higher layer protocol, mostly IP but others may be supported such as Novell IPX and AppleTalk)
- CRC: checked at receiver, if error is detected, the frame is simply dropped

Ethernet Technologies: 10Base2

- 10: 10Mbps; 2: under 200 meters max cable length
- thin coaxial cable in a bus topology

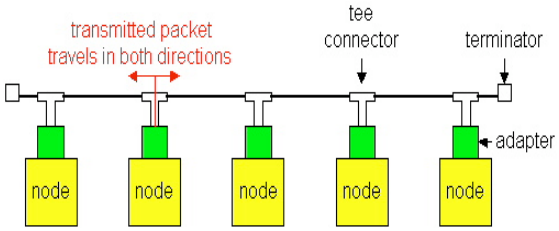

- repeaters used to connect up to multiple segments
- repeater repeats bits it hears on one interface to its other interfaces: physical layer device only!
- has become a legacy technology

10BaseT and 100BaseT

- 10/100 Mbps rate; latter called "fast ethernet"
- T stands for Twisted Pair
- Nodes connect to a hub: "star topology"; 100 m max distance between nodes and hub
- Hubs are essentially physical-layer repeaters:
  - bits coming in one link go out all other links
  - no frame buffering
  - no CSMA/CD at hub: adapters detect collisions
  - provides net management functionality

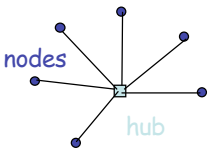

Gbit Ethernet

- Uses standard Ethernet frame format
- Allows for point-to-point links and shared broadcast channels
- In shared mode, CSMA/CD is used; short distances between nodes to be efficient
- Uses hubs, called here "Buffered Distributors"
- Full-Duplex at 1 Gbps for point-to-point links
- 10 Gbps now !

Interconnecting LANs

- Bridges (aka Ethernet switches) were introduced to allow the interconnection of several local area networks (LANs) without a router.
- By partitioning a large LAN into multiple smaller networks, there are fewer collisions, and more parallel communications.
- It is now common for the port of an Ethernet switch to connect to just one (or a small number of) hosts.

An Ethernet Network

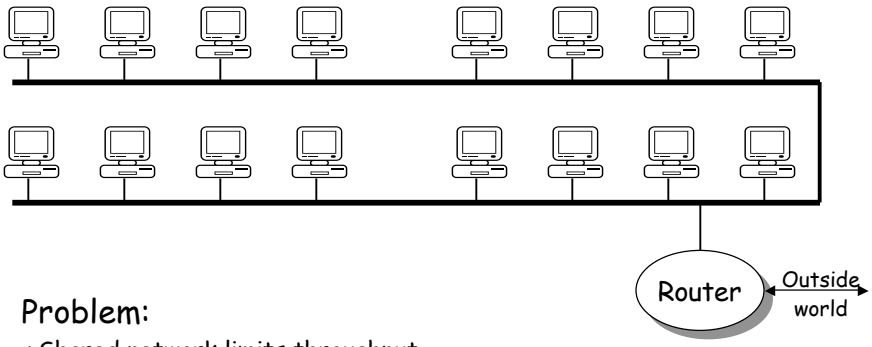

Problem:

- Shared network limits throughput.
- Lots of collisions reduces efficiency.

Ethernet Switching

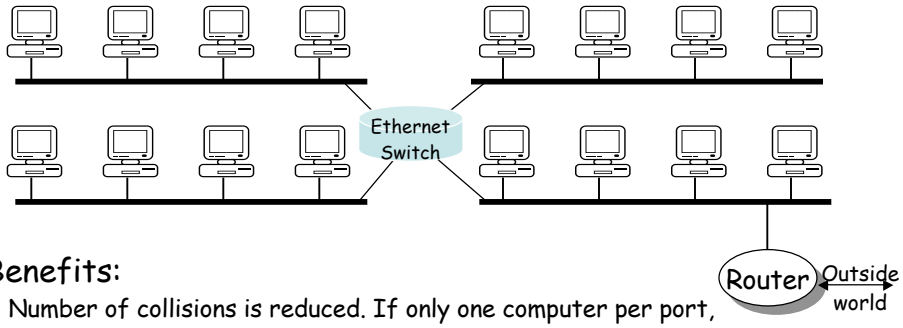

Benefits:

- Number of collisions is reduced. If only one computer per port, no collisions can take place (each cable is now a self-contained point-to-point Ethernet link).
- Capacity is increased: the switch can forward multiple frames to different computers at the same time.

One Ethernet Switch

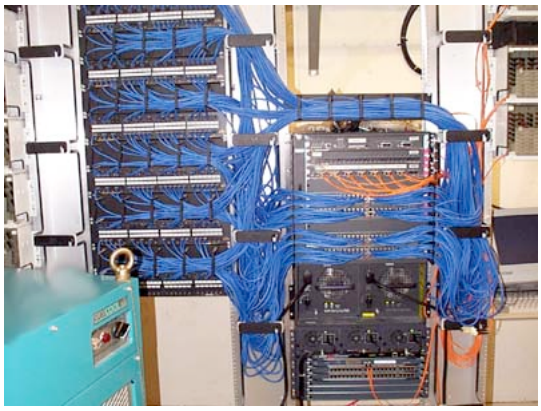

Not an atypical LAN (IP network)

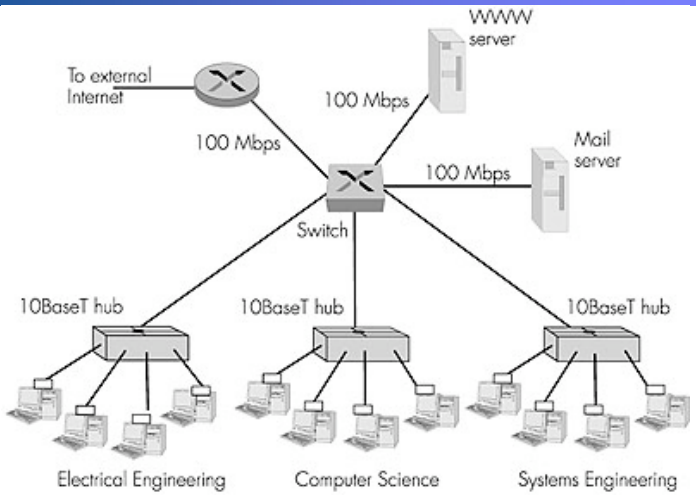

Ethernet Switching

1. Examines the header of each arriving frame.
2. If the Ethernet DA is in its table, it forwards the frame to the correct output port(s).
3. If the Ethernet DA is not in its table, it broadcasts the frame to all ports (except the one through which it arrived).
4. The table is learned by examining the Ethernet SA of arriving packets.

Ethernet Switching

Learning addresses

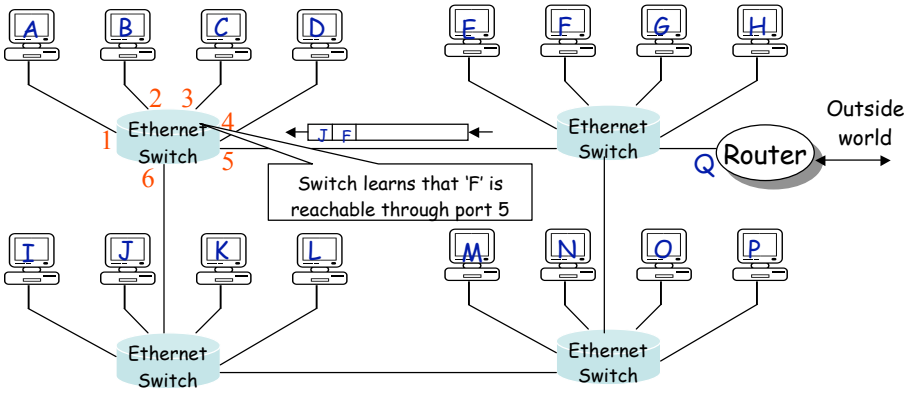

Eth g

Ethernet address	Port
A	1
B	2
C	3
D	4
E, F, G, H, Q	5
I, J, K, L, M, N, O, P	6

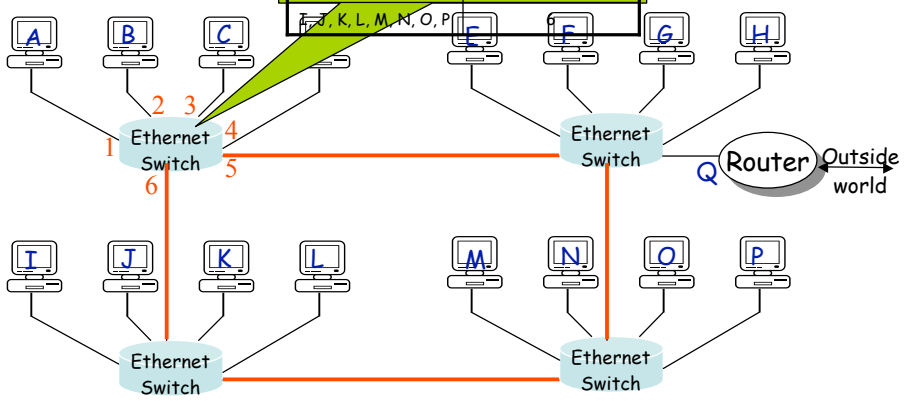

Q: How do we prevent loops?

Perspective

- Ethernet is extremely successful
  - Low cost compared to FDDI, Token Ring
  - Key: Use same cabling infrastructure, framing
- Some issues
  - Nondeterministic Service
  - No priorities
  - Min frame size may be large

Ethernet Futures

- 10 Gigabit Ethernet
- Metro Ethernet
  - Advantages: Cheaper
  - Use same interfaces for LAN and WAN

Ethernet Service – Basic Model

- CE attaches to UNI
- CE can be
  - router
  - IEEE 802.1Q bridge (switch)
- UNI (User Network Interface)
  - Standard IEEE 802.3 Ethernet PHY and MAC
  - 10Mbps, 100Mbps, 1Gbps or 10Gbps
- Metro Ethernet Network (MEN)
  - May use different transport technologies, e.g., SONET, DWDM, MPLS, RPR, etc.

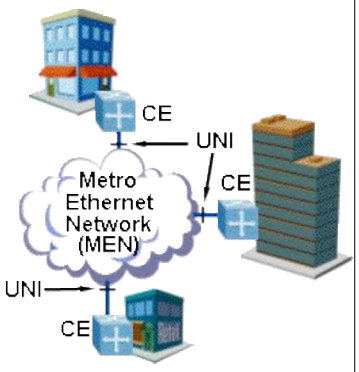

CE = Customer Equipment
UNI = User Network Interface
MEN = Metro Ethernet Network

Wireless LANs

- IEEE 802.11
- Bandwidth: 1 - 54 Mbps
- Physical Media
  - spread spectrum radio (2.4GHz)
  - diffused infrared (10m)

Spread Spectrum

- Idea
  - spread signal over wider frequency band than required
  - originally designed to thwart jamming
- Frequency Hopping
  - transmit over random sequence of frequencies
  - sender and receiver share…
    - pseudorandom number generator
    - seed
  - 802.11 uses 79 x 1MHz-wide frequency bands

Spread Spectrum (cont)

- Direct Sequence
  - for each bit, send XOR of that bit and *n* random bits
  - random sequence known to both sender and receiver
  - called *n*-bit *chipping code*
  - 802.11 defines an 11-bit chipping code

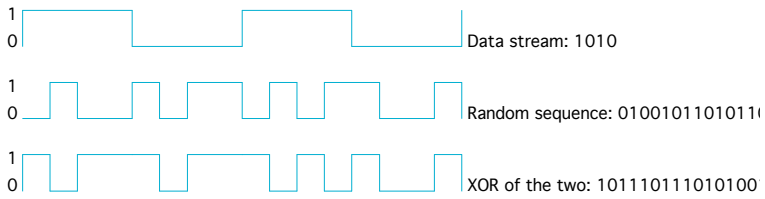

Collisions Avoidance

- Similar to Ethernet
- Problem: *hidden* and *exposed* nodes

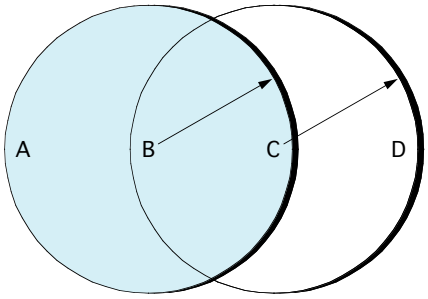

MACAW

- Sender transmits `RequestToSend` (RTS) frame
- Receiver replies with `ClearToSend` (CTS) frame
- Neighbors…
  - see CTS: keep quiet
  - see RTS but not CTS: ok to transmit
- Receive sends ACK when has frame
  - neighbors silent until see ACK
- Collisions
  - no collisions detection
  - known when don't receive CTS
  - exponential backoff

Supporting Mobility

- Case 1: *ad hoc* networking
- Case 2: *access points* (AP)
  - tethered
  - each mobile node associates with an AP

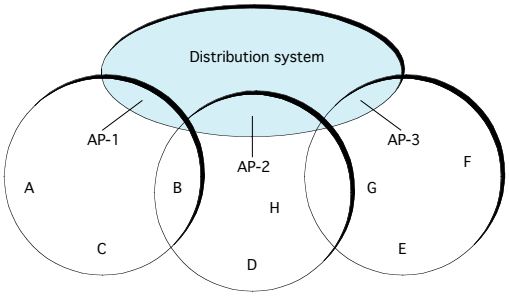

Mobility (cont)

- Scanning (selecting an AP)
  - node sends `Probe` frame
  - all AP's w/in reach reply with `ProbeResponse` frame
  - node selects one AP; sends it `AssociateRequest` frame
  - AP replies with `AssociationResponse` frame
  - new AP informs old AP via tethered network
- When
  - active: when join or move
  - passive: AP periodically sends `Beacon` frame

LAN Addresses and ARP

32-bit IP address:

- *network-layer* address
- used to get datagram to destination IP network (recall IP network definition)

LAN (or MAC or physical or Ethernet) address:

- used to get datagram from one interface to another physically-connected interface (same network)
- 48 bit MAC address (for most LANs) "burned" in the adapter EPROM

LAN Address (more)

- MAC address allocation administered by IEEE
- manufacturer buys portion of MAC address space (to assure uniqueness)
- Analogy:
  - (a) MAC address: like Social Security Number
  - (b) IP address: like postal address
- MAC flat address => portability
  - can move LAN card from one LAN to another
- IP hierarchical address NOT portable
  - depends on IP network to which node is attached

ARP: Address Resolution Protocol

Question: how to determine MAC address of B knowing B's IP address?

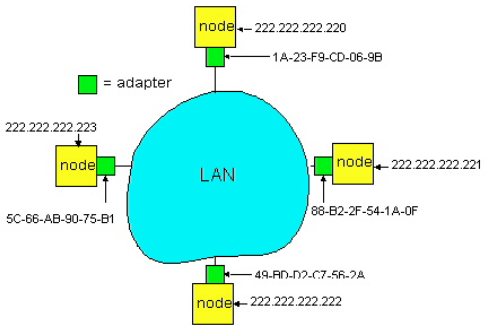

- Each IP node (Host, Router) on LAN has ARP table
- ARP Table: IP/MAC address mappings for some LAN nodes

  < IP address; MAC address; TTL>
  - TTL (Time To Live): time after which address mapping will be forgotten (typically 20 min)

ARP protocol

- A wants to send datagram to B, and A knows B's IP address.
- Suppose B's MAC address is not in A's ARP table.
- A broadcasts ARP query packet, containing B's IP address
  - all machines on LAN receive ARP query
- B receives ARP packet, replies to A with its (B's) MAC address
  - frame sent to A's MAC address (unicast)
- A caches (saves) IP-to-MAC address pair in its ARP table until information becomes old (times out)
  - soft state: information that times out (goes away) unless refreshed
- ARP is "plug-and-play":
  - nodes create their ARP tables without intervention from net administrator

ARP Protocol (II)

- Proxy ARP
  - Reply on behalf of another node
- Gratuitous ARP
  - Node sends ARP asking for its own IP address
    - Find out if address has been claimed
    - Change the mapping between MAC<->IP addr
- Do you see any problem with this?

ARP High jacking

- Node can "steal" packets destined to another node
- Solutions
  - Static ARP entries
  - Switched LANs
  - Lock MAC addresses to Switch ports

Reverse ARP

- Used to get IP address if MAC address is known
  - Used by disk-less clients
  - Same packet format as ARP
- Not widely used anymore
  - DHCP