Physically Based Rendering (600.657)

Light Sources

Light Sources

- Point Lights
- Distant Lights
- Area Lights

Light Sources

Point Light:

Omni-directional (uniform) point source.

- Intensity (*I*)
- Position (*p*)

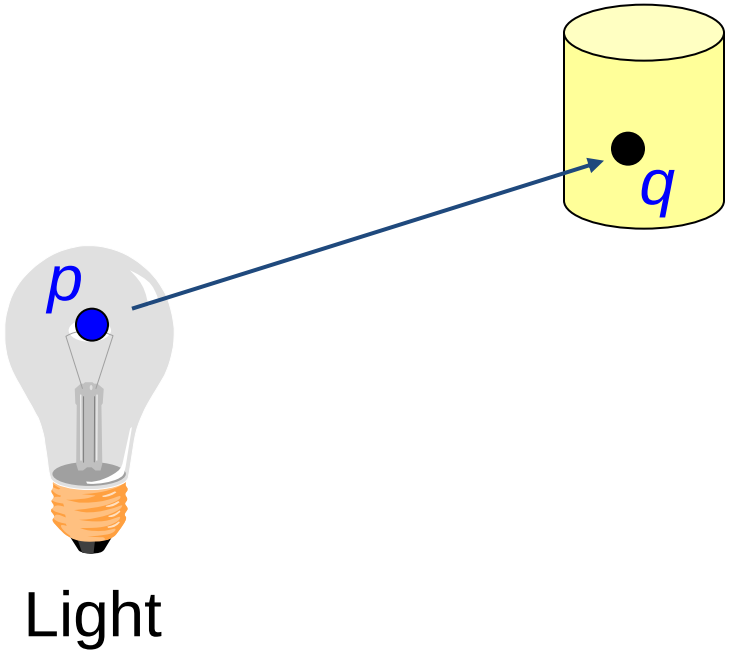

Light Sources

Point Light:

Omni-directional (uniform) point source.

- Intensity (I)
- Position (p)

For a scene point q, the radiance arriving at q is given by:

$$R(q) = \frac{I}{\|p - q\|^2}$$

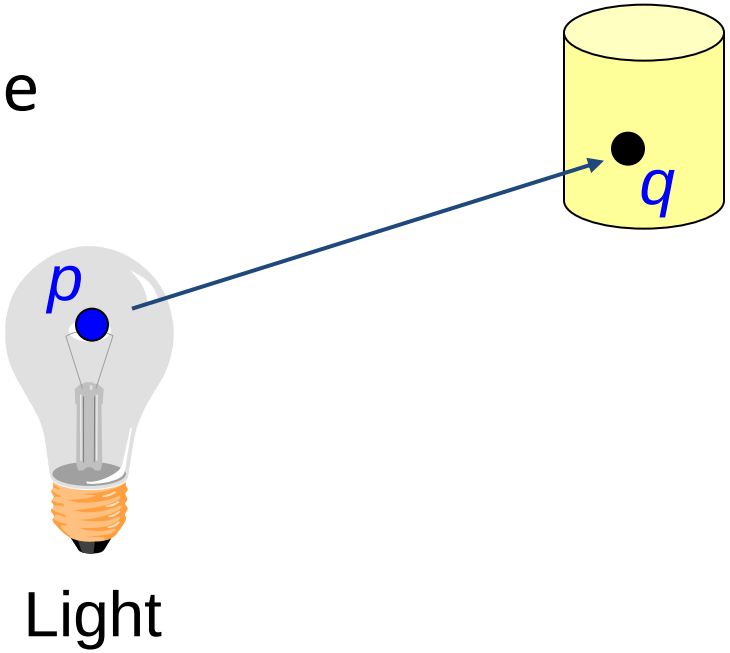

Light Sources

Point Light:

Since the intensity is uniform, the total power of the light sources is:

$$\Phi = \int_{S^2} R(\omega) d\omega = 4\pi I$$

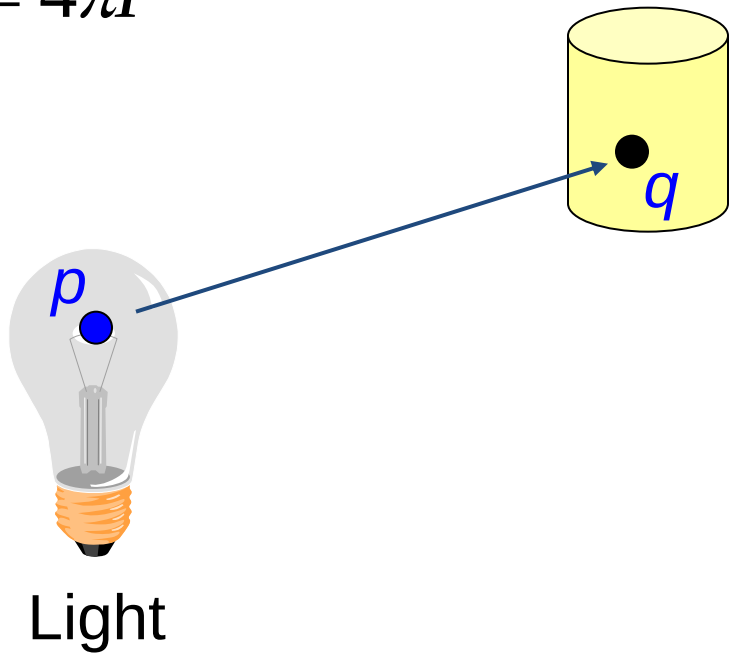

Light Sources

Spotlight:

Point light source with direction

- Intensity (*I*)
- Position (*p*)
- Direction (*d*)
- Cut-off (α)
- Fall-off (β)

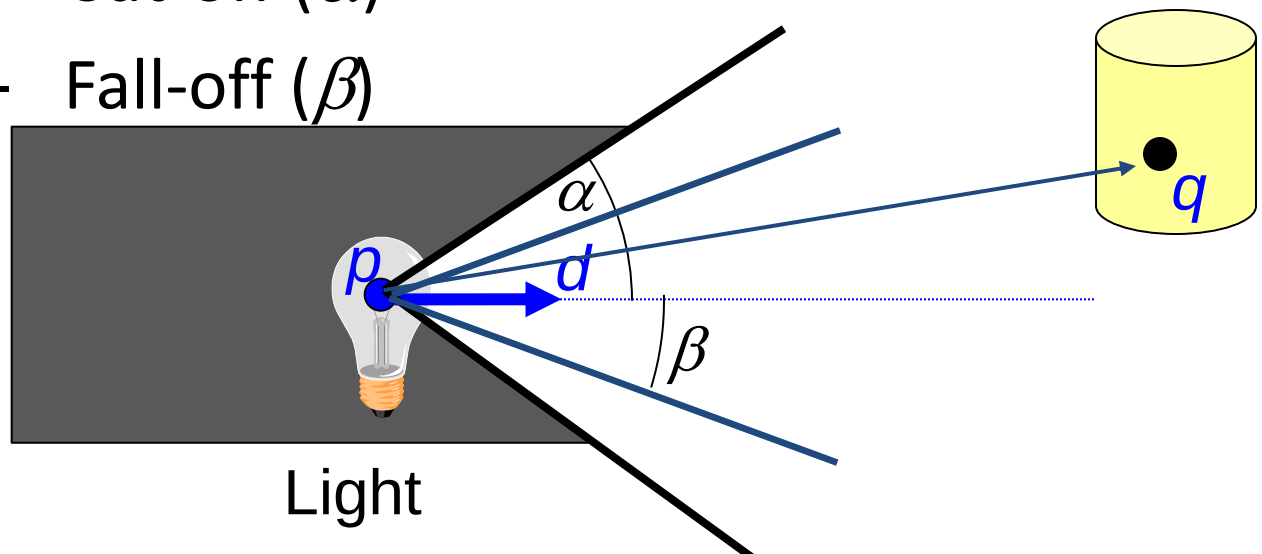

Light Sources

Spotlight:

Point light source with direction

- Intensity (I)
- Position (p)
- Direction (d)
- Cut-off (α)
- Fall-off (β)

$$R(q) = \frac{I}{\|p-q\|^2} \begin{cases} 1 & \text{if } \angle(q-p), d < \beta \\ \left(\frac{\cos \angle(q-p), d - \cos\alpha}{\cos\beta - \cos\alpha} \right)^4 & \text{otherwise} \\ 0 & \text{if } \angle(q-p), d > \alpha \end{cases}$$

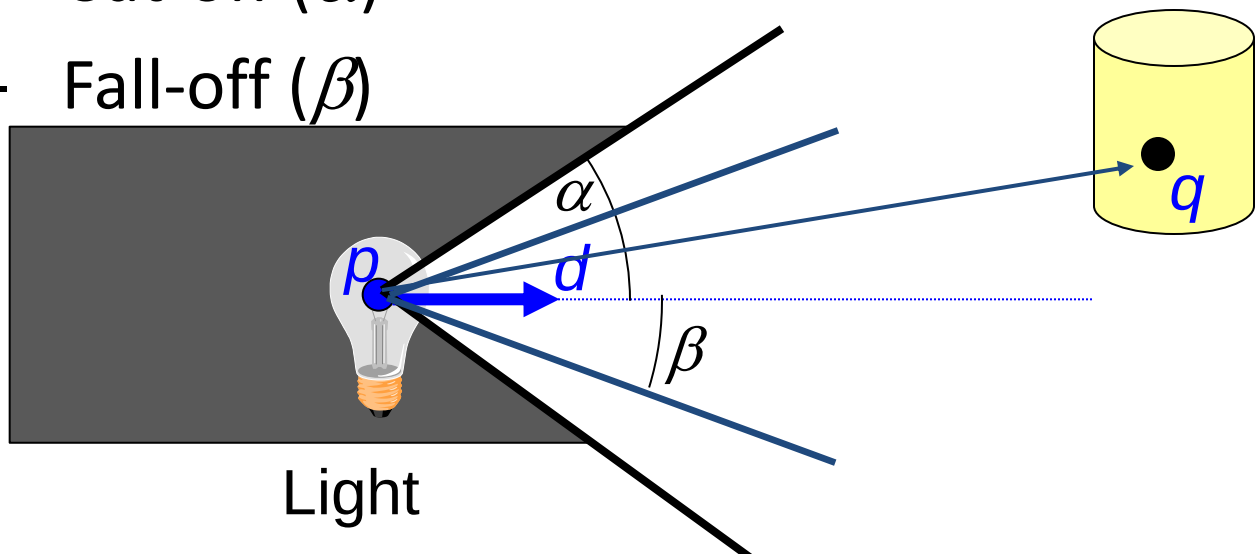

Light Sources

Spotlight:

We can approximate the power by:

$$\Phi \approx \int_{\omega \in S^2 | \theta < (\alpha+\beta)/2} R(\omega) d\omega = 2\pi I \left(1 - \cos\frac{\alpha+\beta}{2}\right)$$

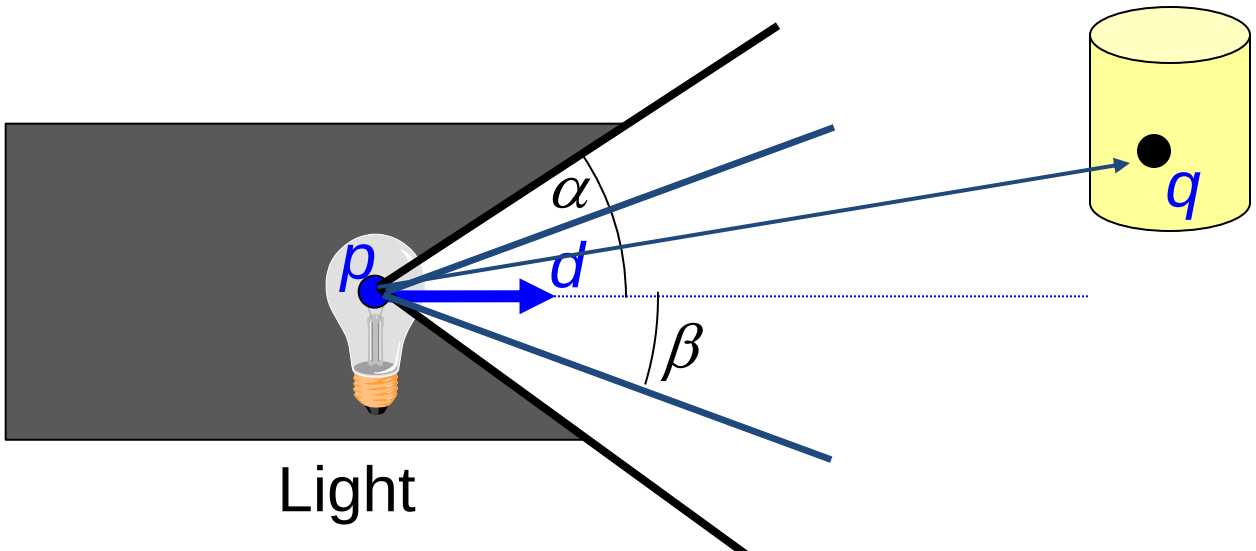

Light Sources

Texture Projecting Lights:

Point light source with intensity modulated by a projected texture

- Intensity (I)
- Position (p)
- Projection (π)
- Texture (τ)

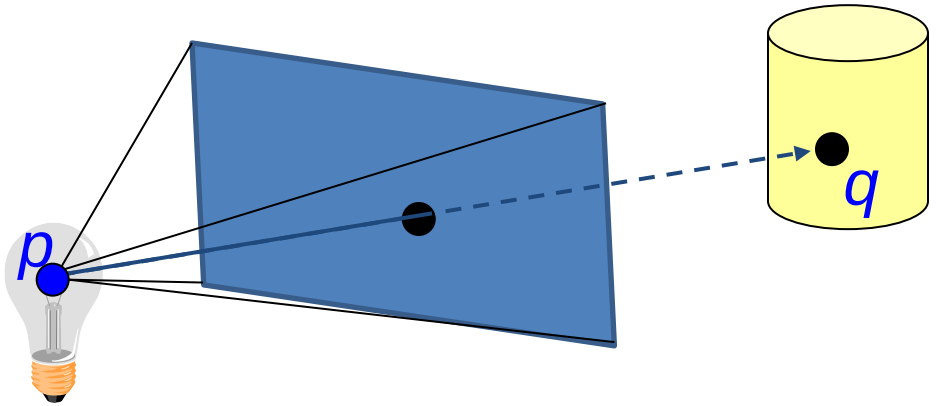

Light

Light Sources

Texture Projecting Lights:

Point light source with intensity modulated by a projected texture

- Intensity (I)
- Position (p)
- Projection (π)
- Texture (τ)

$$R(q) = \frac{I}{\|p-q\|^2} \begin{cases} \tau(\pi(q)) & \text{if } q \text{ in front of } p \\ 0 & \text{otherwise} \end{cases}$$

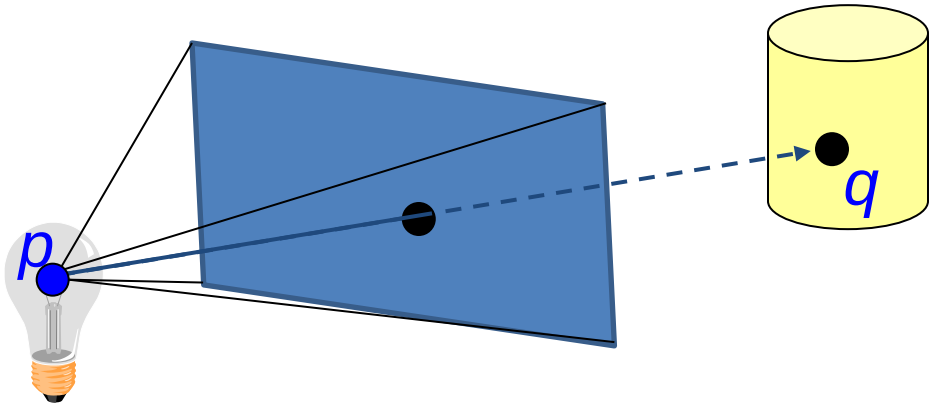

Light

Light Sources

Texture Projecting Lights:

Can approximate power by a spotlight whose cut-off angle is the angle defined by the diagonal:

$$\Phi \approx \int_{\omega \in S^2 | \theta < \gamma} R(\omega) \cdot \tau(\omega) d\omega \approx 2\pi I \cdot Avg(\tau)\left(1 - \cos\gamma\right)$$

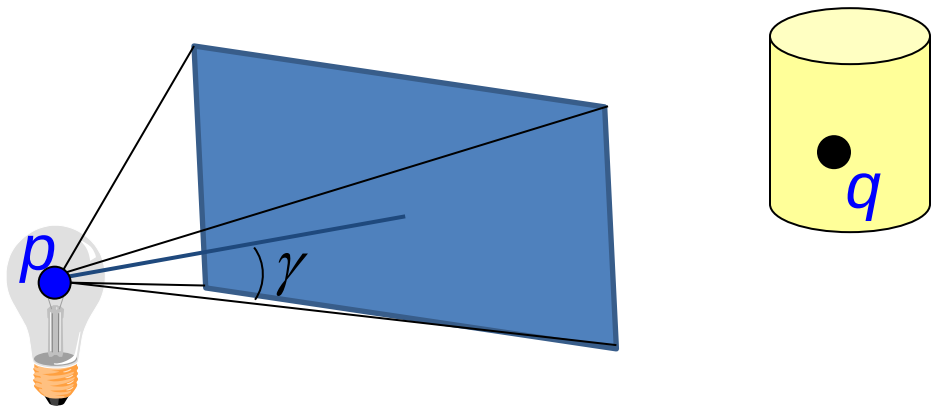

Light

Light Sources

Goniophotometric Diagram:

Point light source with intensity modulated by a spherical texture

- Intensity (I)
- Position (p)
- Texture (τ)

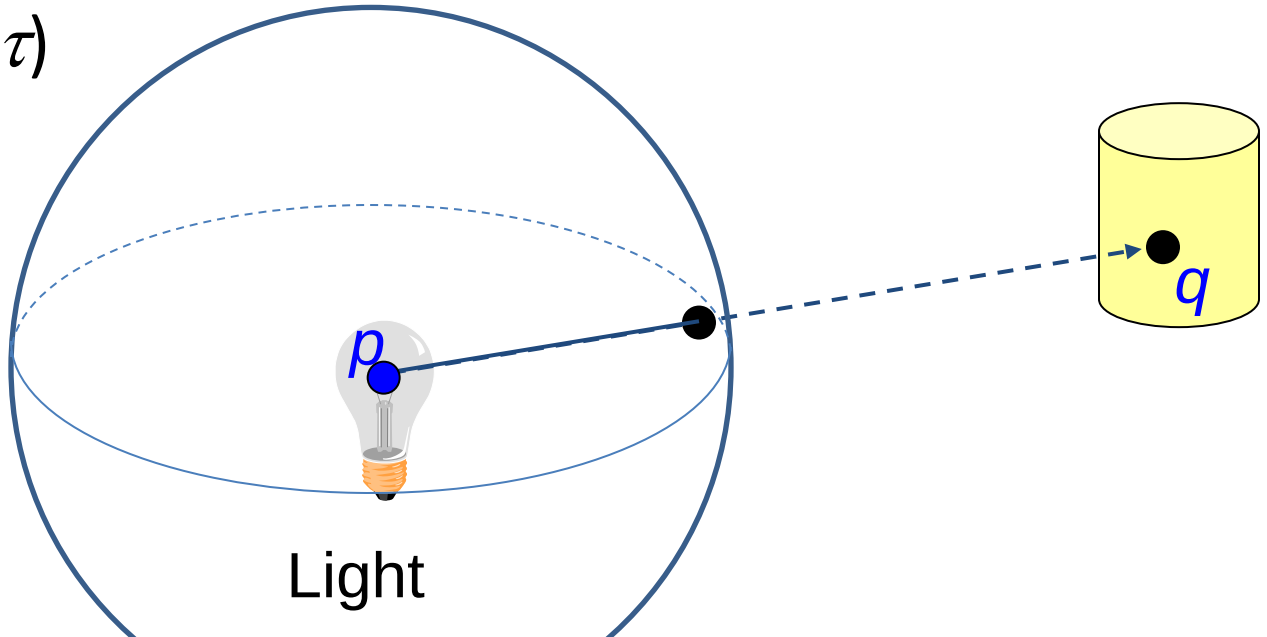

Light Sources

Goniophotometric Diagram:

Point light source with intensity modulated by a spherical texture

- Intensity (I)
- Position (p)
- Texture (τ)

$$R(q) = \frac{\tau\left(\theta(q-p), \phi(q-p)\right) I}{\left\| p - q \right\|^2}$$

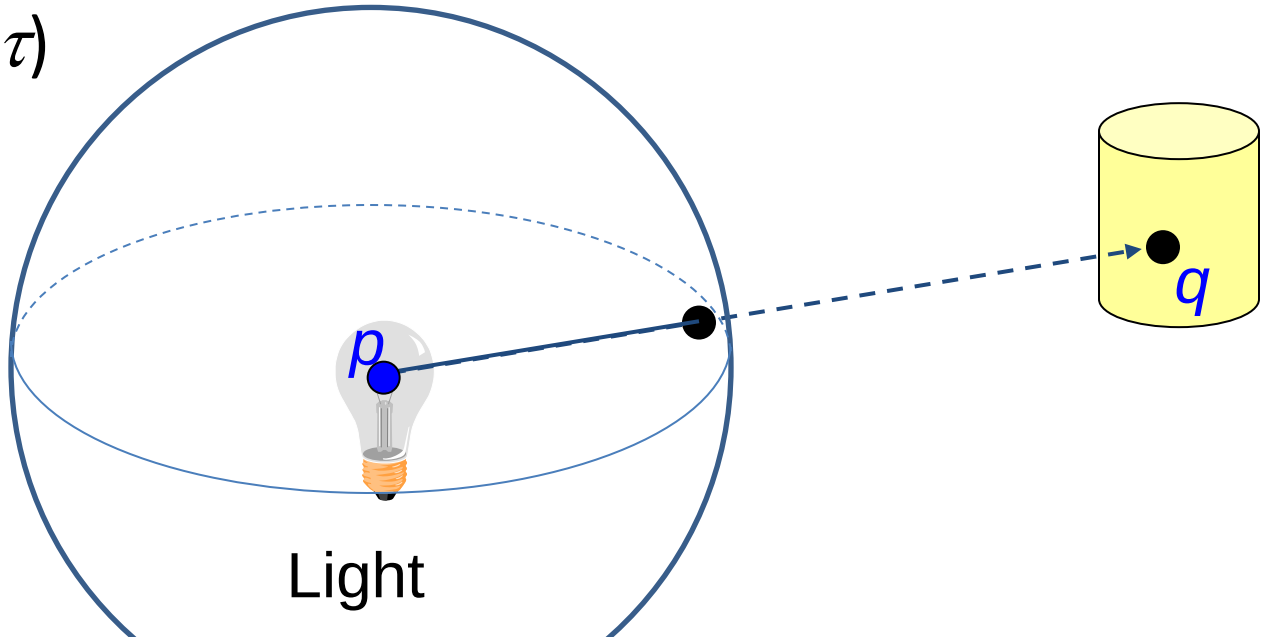

Light Sources

Goniophotometric Diagram:

Can approximate power by average of the spherical texture map:

$$\Phi = \int_{S^2} I(\omega) d\omega \approx 4\pi I \cdot Avg(\tau)$$

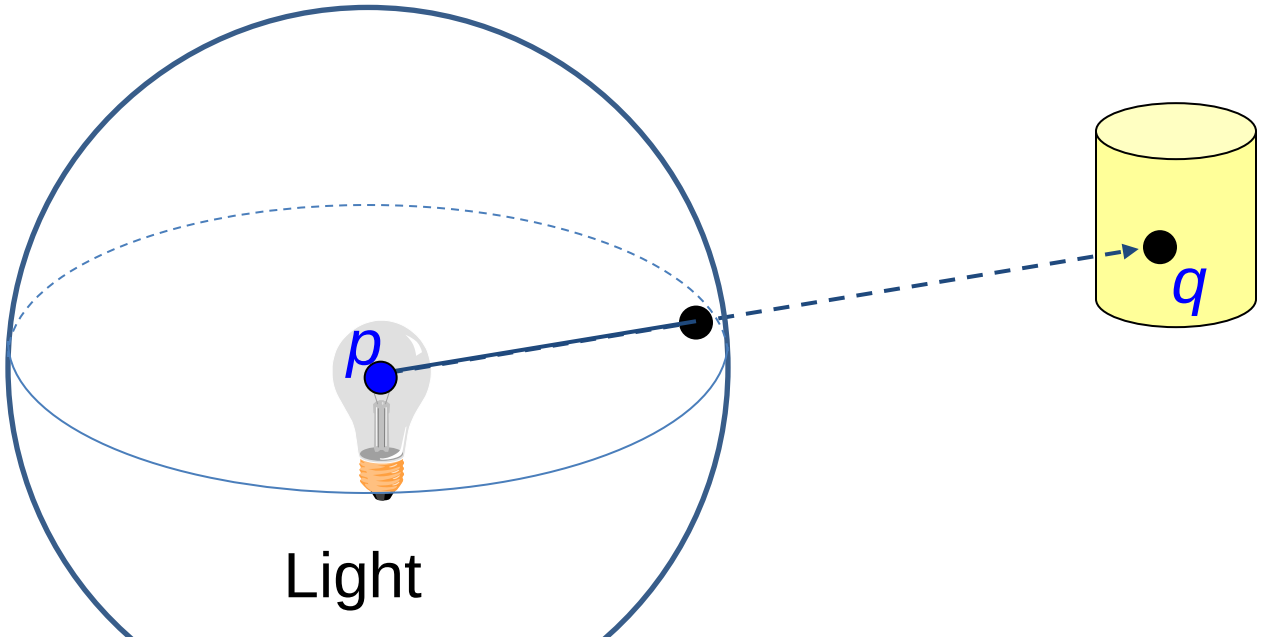

Light Sources

Directional Light:

Point light source at infinity

- Radiance (*r*)
- Direction (*d*)

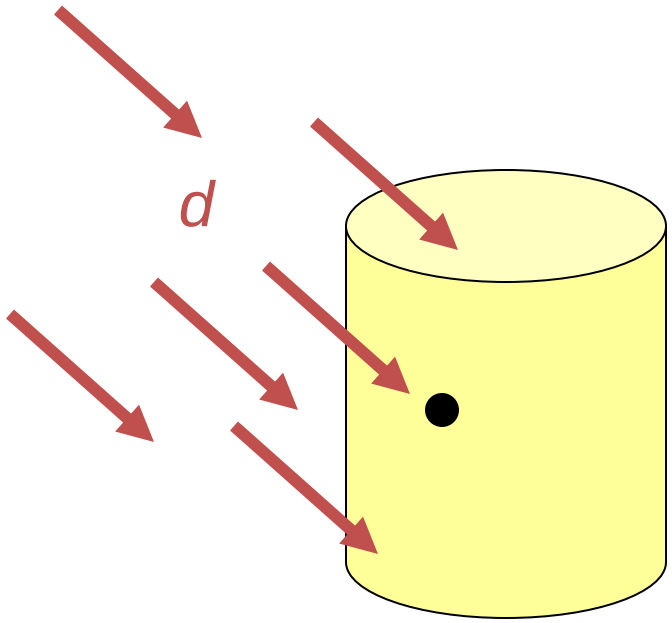

Light Sources

Directional Light:

Point light source at infinity

- Radiance (*r*)
- Direction (*d*)

$$R(q) = r$$

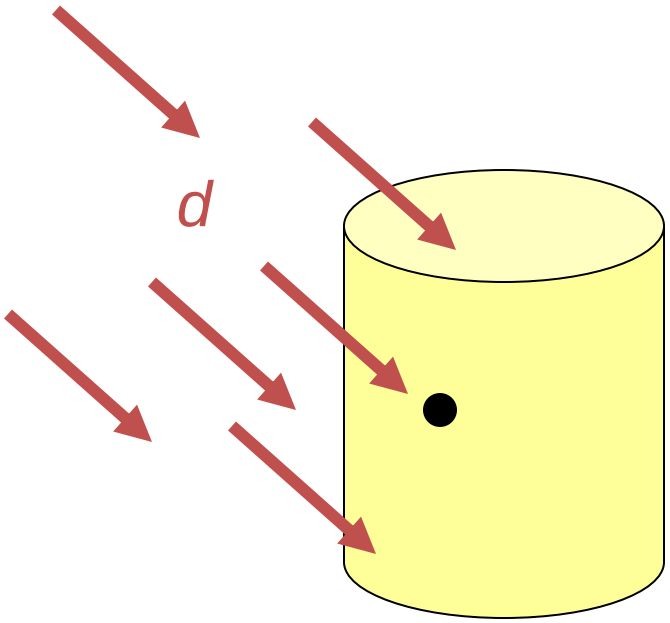

Light Sources

Directional Light:

Can approximate the total power by estimating the total surface area projected in the light direction:

$$\Phi = \int_S V(q)R(q)\langle n, d\rangle dq \approx \pi \cdot \text{radius}^2 \cdot I$$

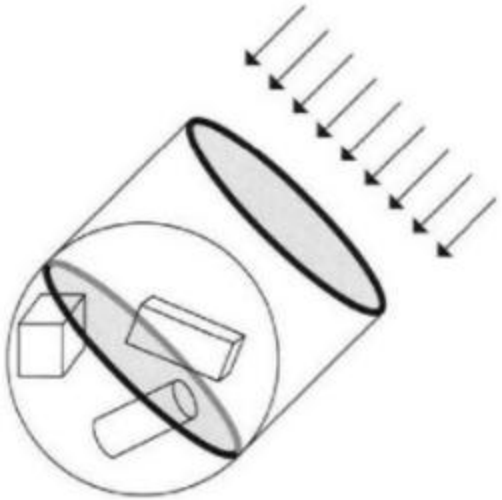

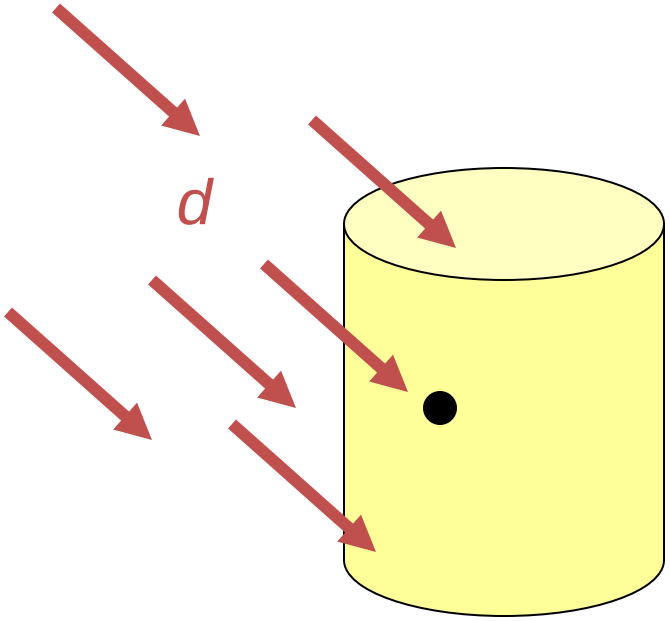

[Image courtesy of Pharr and Humphreys]

Light Sources

Area Light Source:

Emitting surface, giving radiance as a function of:

- Position on surface (p)
- Surface normal (n)
- Outgoing direction (ω)

[Image courtesy of Pharr and Humphreys]

Light Sources

Diffuse Area Light Source:

Uniformly emitting surface:

$$R(q) = \begin{cases} L_e & \text{if } \langle \omega, n \rangle > 0 \\ 0 & \text{otherwise} \end{cases}$$

[Image courtesy of Pharr and Humphreys]

Light Sources

Environment Maps:

Use a spherical map to characterize light coming into the scene from different directions.

[Image courtesy of Pharr and Humphreys]

Light Sources

Environment Maps:

Use a spherical map to characterize light coming into the scene from different directions.

$$R(q) = \tau\big(\theta(q), \phi(q)\big)$$

[Image courtesy of Pharr and Humphreys]